PVC hose with embedded spring and flanges, PVC with stainless steel flange, 304/1.4301, DN 63 ISO-K

PFEIFFER

PVC hose

PFEIFFER

Illustration only

PVC hose with embedded spring and flanges, PVC with stainless steel flange, 304/1.4301, DN 63 ISO-K

- Inner tube: PVC, transparent
- Casing: Steel coil
- Hose cover: PVC, transparent
- Smooth inner and outer walls
- Custom lengths on request

Dimensions

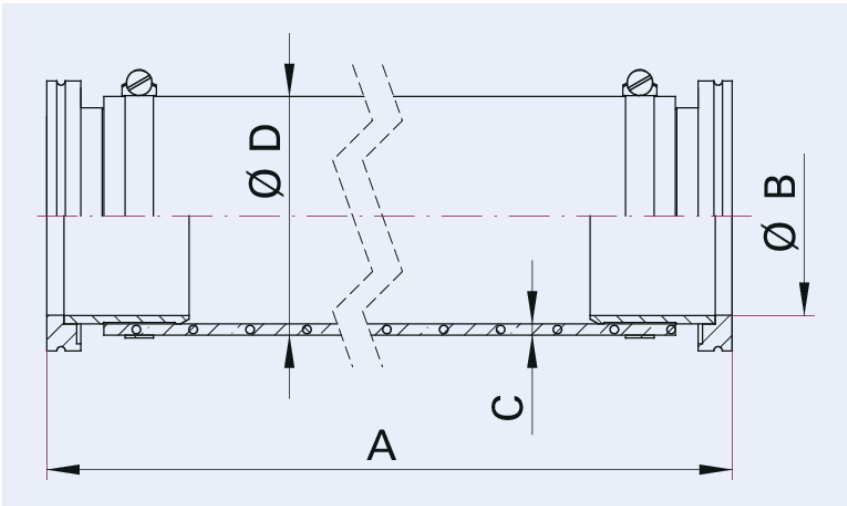

A	500 mm
B	70 mm
C	7 mm
D	90 mm

Technical Data	PVC hose with embedded spring and flanges, PVC with stainless steel flange, 304/1.4301, DN 63 ISO-K
Materials in contact with media	Flange: Stainless steel
Temperature range	5 – 40 °C
Bending radius	400 mm | 15.75 inch
Connection flange	DN 63 ISO-K
Pressure range	$1 \cdot 10^{-4}$ hPa – to ambient pressure
Material	PVC
Temperature range max.	40 °C | 104 °F | 313.15 K
Temperature range min.	5 °C | 23 °F | 268.15 K

Order number	PVC hose with embedded spring and flanges, PVC with stainless steel flange, 304/1.4301, DN 63 ISO-K
PVC hose with embedded spring and flanges, PVC with stainless steel flange, 304/1.4301, DN 63 ISO-K	300SPA063-0500.A

Are you looking for an optimum vacuum solution?
Talk to us:
Pfeiffer Vacuum Components & Solutions GmbH Germany
T +49 551 99963-0
info-cs@pfeiffer-vacuum.com

Or scan the barcode, to visit our web page:

https://webportal.pfeiffer-vacuum.com/global/en/contact

Errors and/or changes excepted. - 5/14/2025

Follow Us On Social Media
#pfeiffervacuum

www.pfeiffer-vacuum.com

PFEIFFER