Tee, stainless steel 304/1.4301, DN 63 ISO-K

PFEIFFER

T-piece

PFEIFFER

Illustration only

Tee, stainless steel 304/1.4301, DN 63 ISO-K

Dimensions

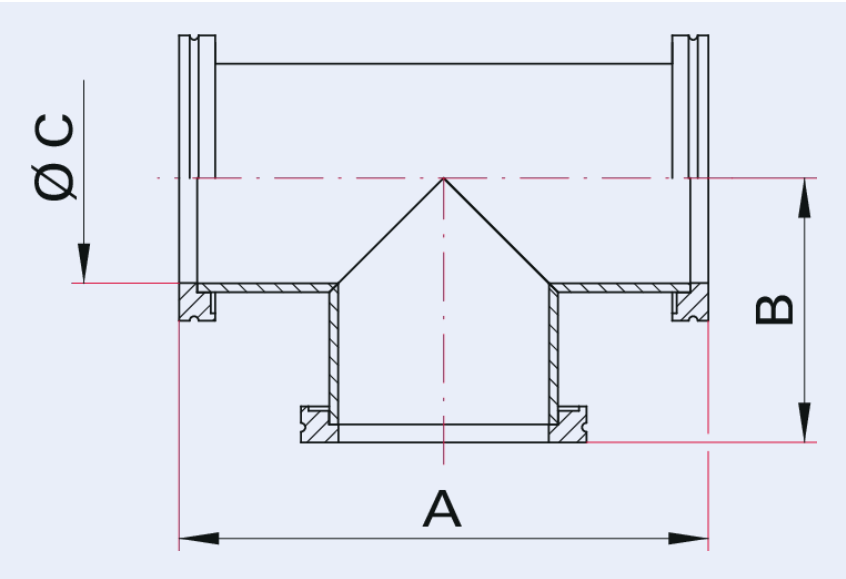

A	176 mm
B	88 mm
C	70 mm

Technical Data	Tee, stainless steel 304/1.4301, DN 63 ISO-K
Materials in contact with media	Stainless steel 1.4301 (AISI 304)
Temperature range	196 – 300 °C
Connection flange	DN 63 ISO-K
Pressure range	$1 \cdot 10^{-8}$ hPa – $5 \cdot 10^{2}$ hPa over pressure (elastomer seal); $1 \cdot 10^{-9}$ hPa – $5 \cdot 10^{2}$ hPa over pressure (metal seal)
Temperature range max.	300 °C | 572 °F | 573.15 K
Temperature range min.	196 °C | 320.8 °F | 77.15 K

Order number	Tee, stainless steel 304/1.4301, DN 63 ISO-K
Tee, stainless steel 304/1.4301, DN 63 ISO-K	320RTS063

Are you looking for an optimum vacuum solution?
Talk to us:
Pfeiffer Vacuum Components & Solutions GmbH Germany
T +49 551 99963-0
info-cs@pfeiffer-vacuum.com

Or scan the barcode, to visit our web page:

https://webportal.pfeiffer-vacuum.com/global/en/contact

Errors and/or changes excepted. - 5/14/2025

Follow Us On Social Media
#pfeiffervacuum

www.pfeiffer-vacuum.com

PFEIFFER